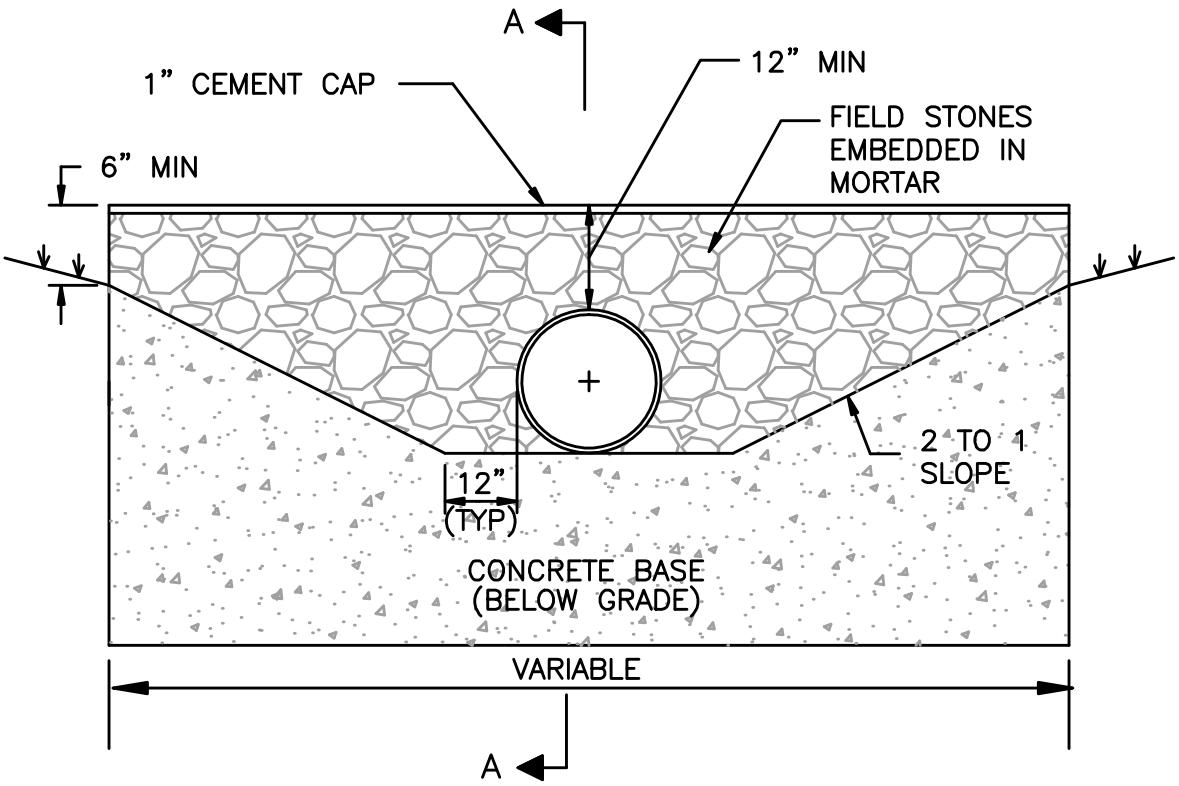


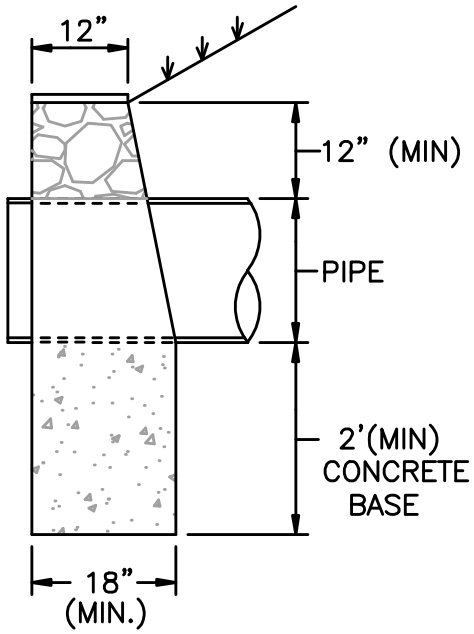


**SECTION A–A**

**TOWN OF CONCORD-PUBLIC WORKS**
**DESIGN & CONSTRUCTION STANDARDS**

FIELD–STONE HEADWALL DETAIL

| SCALE: | DATE: |
|---|---|
| NTS | 3/29/2010 |
| REVISED: | |
| – | |
| DETAIL NUMBER: | |
| DR–11 | |