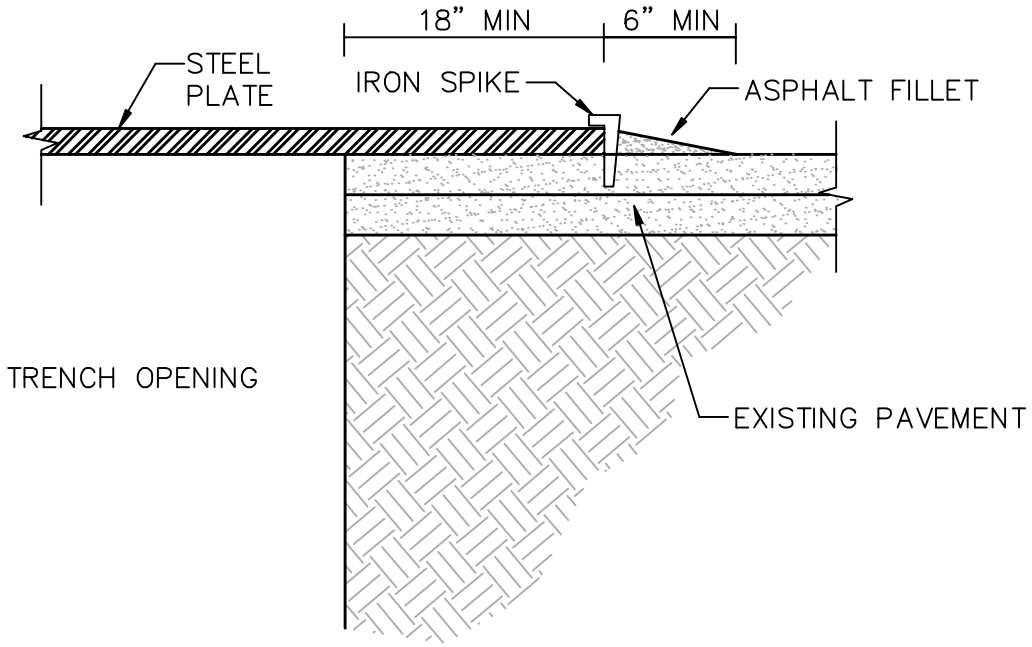


NOTES:

1. USE OF STEEL PLATES ALLOWED ON A CASE BY CASE BASIS, PENDING WRITTEN APPROVAL BY TOWN.
2. CONTRACTOR SHALL BE RESPONSIBLE FOR ANY DAMAGES OR CLAIMS RESULTING FROM THE USE OF STEEL PLATES.
3. MUTCD COMPLIANT RETROREFLECTIVE ORANGE CONSTRUCTION WARNING SIGNS (48"X48") WITH WORDING "STEEL PLATE AHEAD" SHALL BE INSTALLED IN ADVANCE OF STEEL PLATE INSTALLATION.
4. THE CONTRACTOR SHALL DESIGN AND UTILIZE STEEL PLATES OF ADEQUATE DIMMENSIONS AND THICKNESS FOR INTENDED USE AND VEHICLE LOADING. MAXIMUM ALLOWABLE DEFLECTION SHALL BE 0.025". IRON SPIKE FASTENERS SHALL BE INSTALLED AROUND THE PERIMETER OF THE STEEL PLATE.

| | | | |
|---|---|---|---|
| | **TOWN OF CONCORD-PUBLIC WORKS DESIGN & CONSTRUCTION STANDARDS** | **SCALE:** NTS | **DATE:** 3/29/2010 |
| | | **REVISED:** – | |
| | STEEL PLATE INSTALLATION | **DETAIL NUMBER:** RS-18 | |