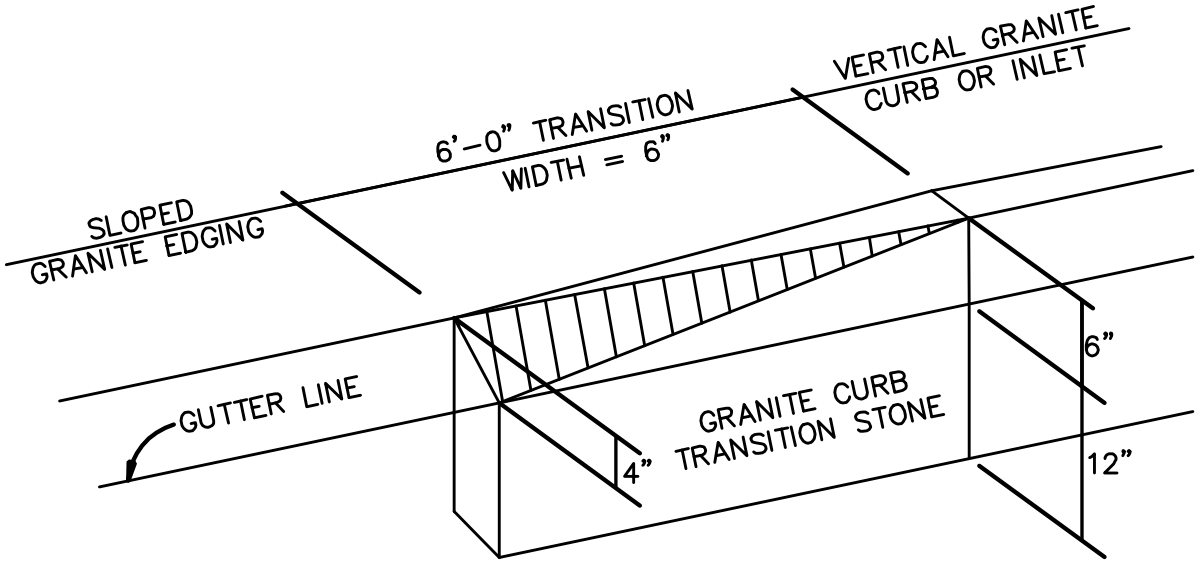

TOWN OF CONCORD-PUBLIC WORKS
DESIGN & CONSTRUCTION STANDARDS

EDGING TO CURB TRANSITION

SCALE:	DATE:
NTS	3/29/2010
REVISED:	
–	
DETAIL NUMBER:	
RS–5	