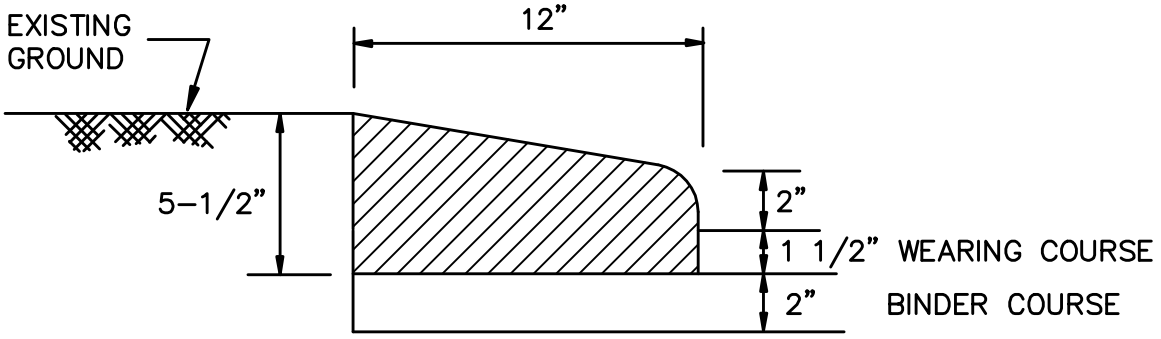

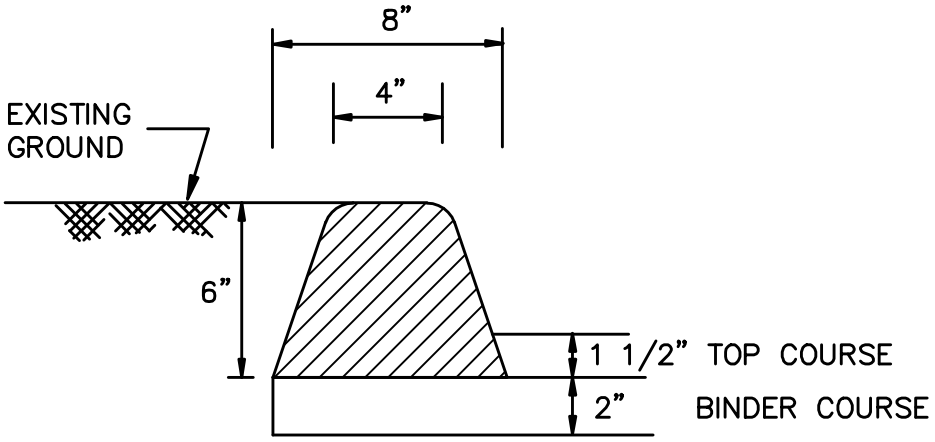

	TOWN OF CONCORD-PUBLIC WORKS DESIGN & CONSTRUCTION STANDARDS	**SCALE:** NTS	**DATE:** 3/29/2010
		REVISED: –	
	HOT MIX ASPHALT BERM & CURB	**DETAIL NUMBER:** RS-6	