CONCORD
BRUCE FREEMAN RAIL TRAIL

STATE	FED. AID PROJ. NO.	SHEET NO.	TOTAL SHEETS
MASS.		004	175

TYPICAL SECTIONS & PAVEMENT NOTES

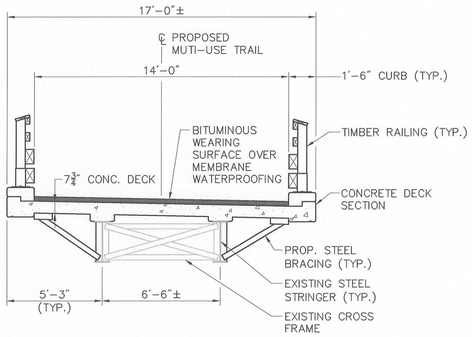

BRIDGE NO. 13.86 OVER NASHOBA BROOK

TYPICAL SECTION

SCALE: 1/4"=1'-0"

STA 185+53± TO STA 185+96±

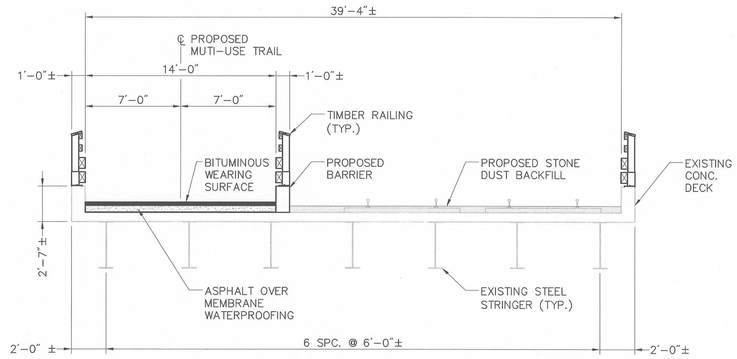

BRIDGE NO. 14.81 OVER NASHOBA BROOK

TYPICAL SECTION

SCALE: 3/16"=1'-0"

STA 135+20± TO STA 135+88±

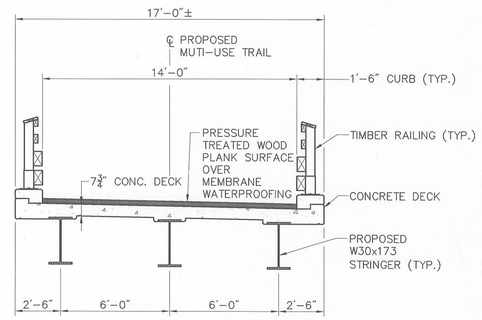

BRIDGE NO. 15.16 OVER ASSABET RIVER

TYPICAL SECTION

SCALE: 1/4"=1'-0"

STA 116+28± TO STA 117+12±

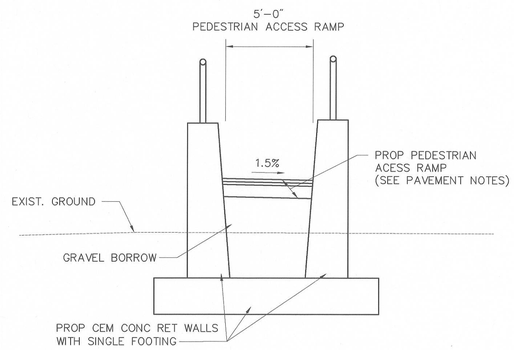

PROPOSED PEDESTRIAN ACCESS RAMP WITH RAILINGS

SCALE: 1"=4'

T:\10127.00\cad\te\planset\10127-TYP.dwg