CONCORD
BRUCE FREEMAN RAIL TRAIL

STATE	FED. AID PROJ. NO.	SHEET NO.	TOTAL SHEETS
MASS.		007	175

CONSTRUCTION DETAILS

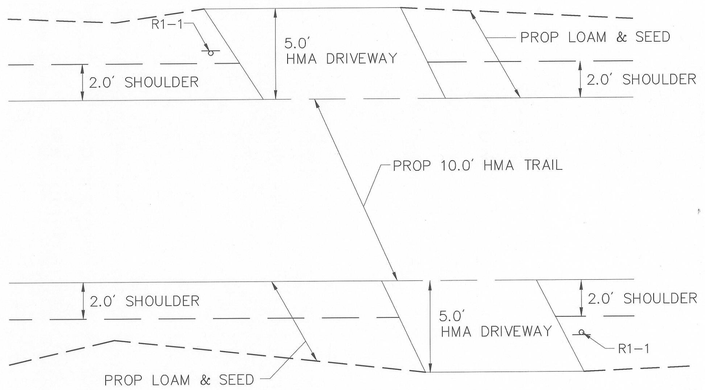

PAVED DRIVEWAY APRON

SCALE: NOT TO SCALE
S-STD.
H-STD.

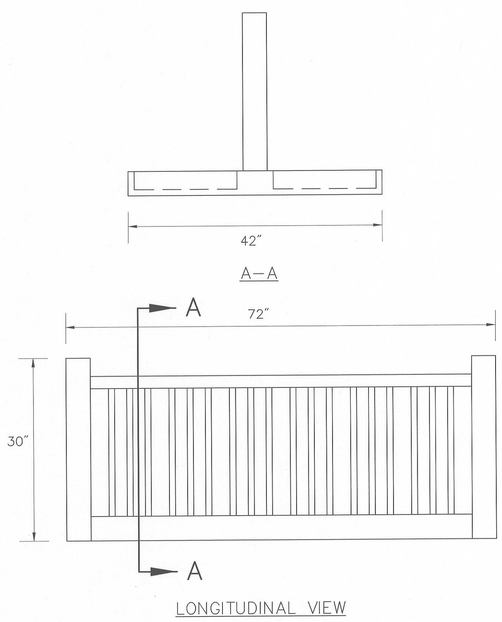

BICYCLE RACK

SCALE: NOT TO SCALE
S-STD.
H-STD.

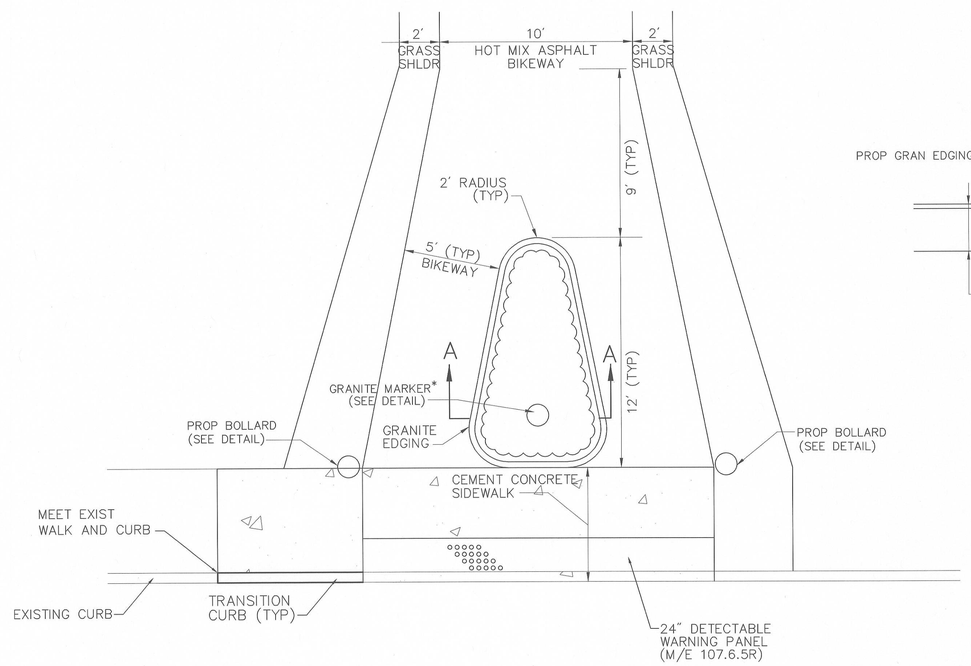

*NOTE:
PROPOSED GRANITE MARKER WITH NO TEXT.

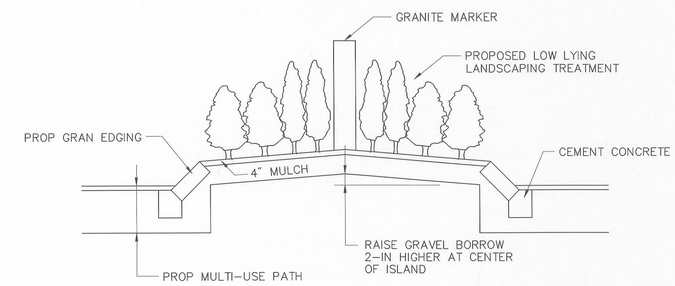

SECTION A-A

LANDSCAPED SPLITTER ISLAND

SCALE: NOT TO SCALE
S-STD.
H-STD.

T:\10127.00\cad\te\planset\10127-Det.dwg