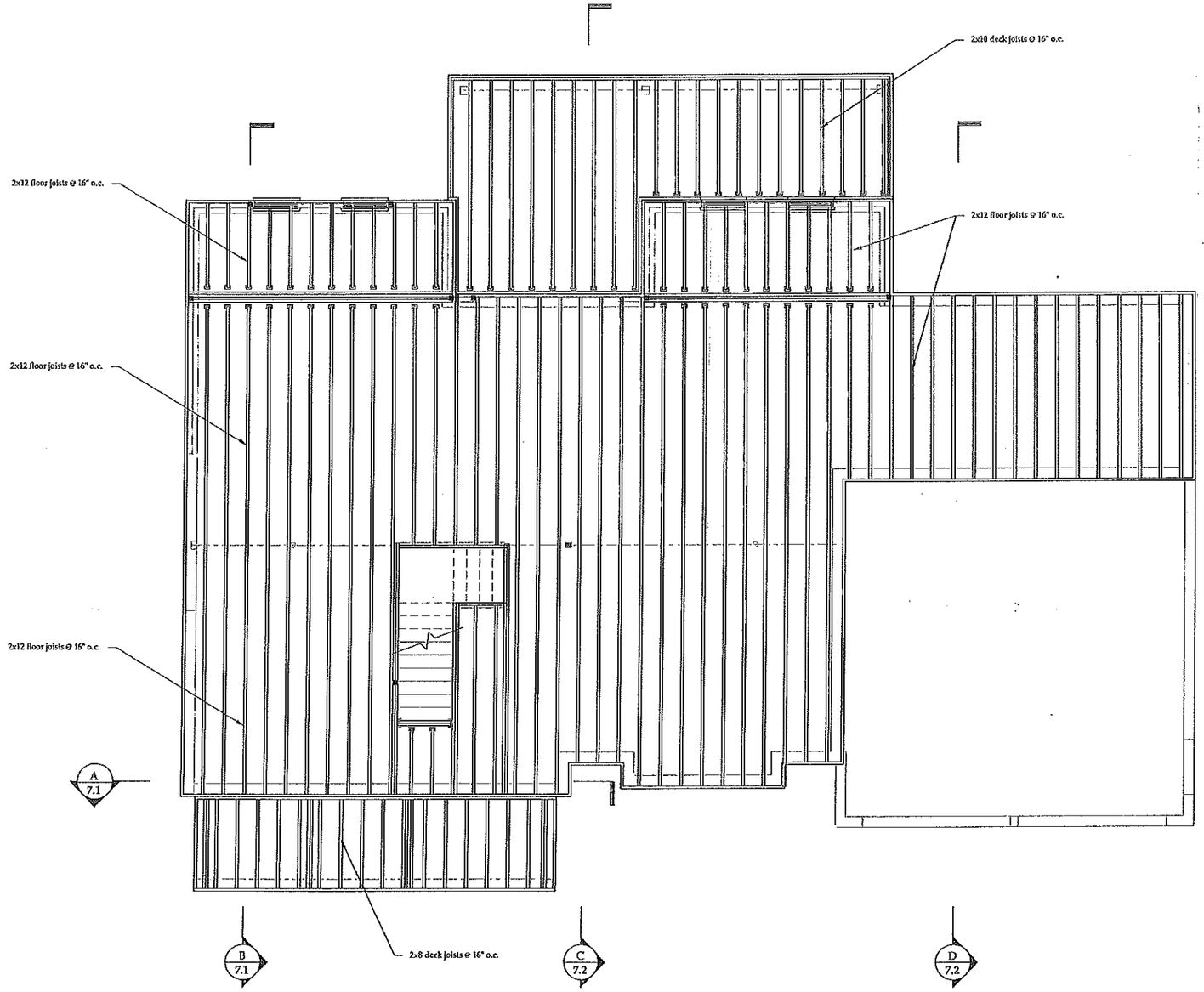

Main Floor Framing

1. All framing lumber to be SPF#2 or better unless otherwise noted.
2. Refer to engineering beam calcs for posting requirements for any beams.

DESIGN LOADS

	LIVE	DEAD	TOTAL
MAIN FLOOR	40	10	50
UPPER FLOORS	40	10	50
CEILING	20	10	30
ROOF	55	15	70

CONTRACTOR TO VERIFY ALL DIMENSIONS AND SPECIFICATIONS PRIOR TO STARTING CONSTRUCTION. BUILDING AS TO MEET OR EXCEED ALL STATE AND LOCAL BUILDING CODES.

JAD DESIGN GROUP INC.
P.O. BOX 729 AMHERST, NH 03031
PHONE: (603) 554-1199
www.jadhomes.com

Job : 2651
Ref :
Date: 4/28/17
Rev :

Hills Brothers Builders
Concord, MA

99 Nimrod
Concord, MA

Main Floor Framing
Scale : 1/8" = 1'-0"

SHEET
A-6.1

© CONFIDENTIAL
JAD DESIGN GROUP INC.

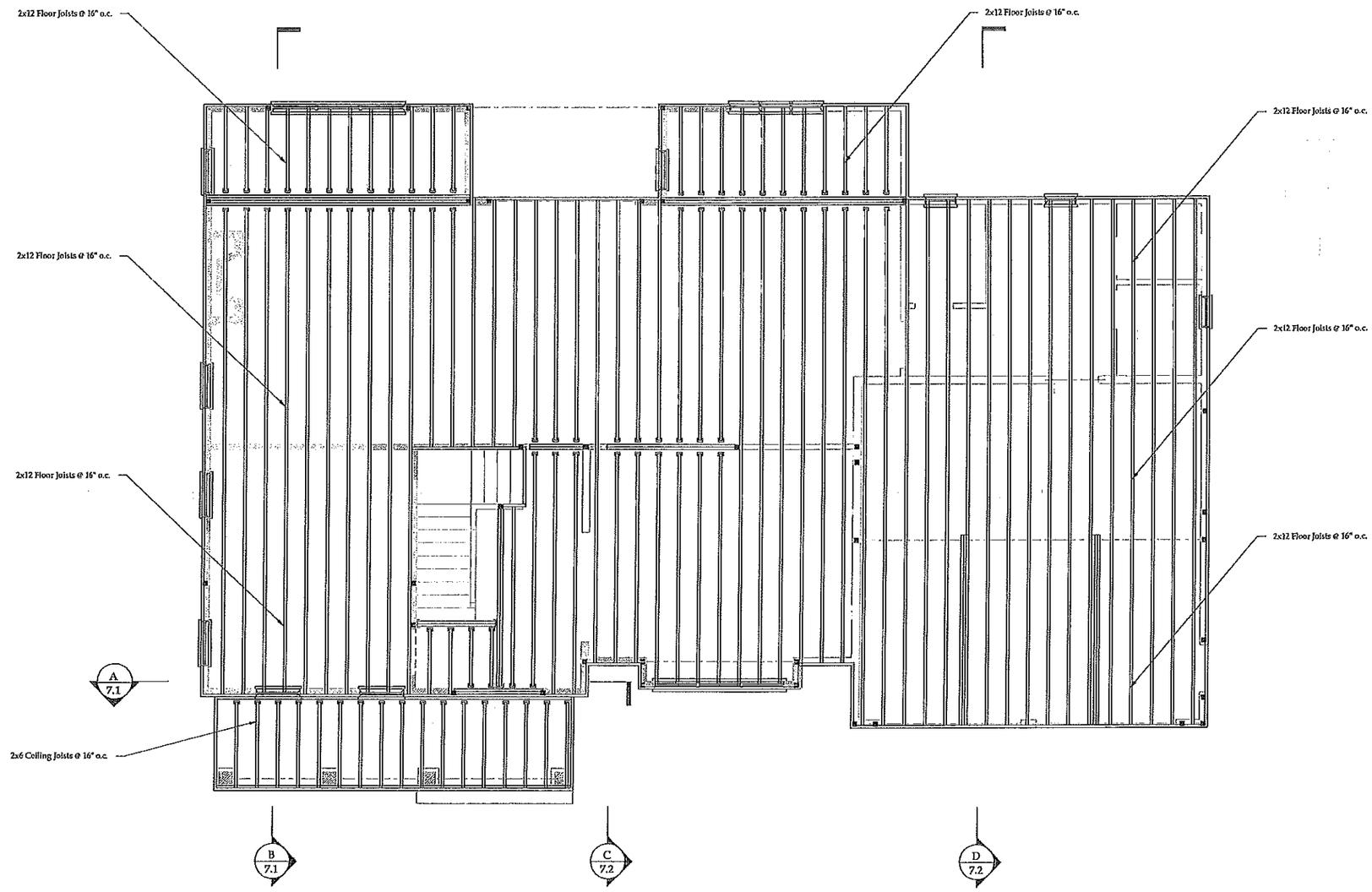

Upper Floor Framing

1. All framing lumber to be SPF#2 or better unless otherwise noted.
2. Refer to engineering beam calcs for posting requirements fror any beams.

DESIGN LOADS

	LIVE	DEAD	TOTAL
MAIN FLOOR	40	10	50
UPPER FLOORS	40	10	50
CEILING	20	10	30
ROOF	55	15	70

CONTRACTOR TO VERIFY ALL DIMENSIONS AND STRUCTURAL MEMBERS PRIOR TO STARTING CONSTRUCTION. BUILDING IS TO MEET OR EXCEED ALL STATE AND LOCAL BUILDING CODES.

JAD DESIGN GROUP INC.
P.O. BOX 728 AMHERST, NH 03031
PHONE: (603) 554-1199
www.jadhomes.com

Job : 2651
Ref :
Date: 4/26/17
Rev :

Hills Brokers Builders
Concord, MA

99 Nimrod
Concord, MA

Upper Floor Framing Plan
Scale : 1/8" = 1'-0"

SHEET
A-6.2

© COPYRIGHT 2017 JAD DESIGN GROUP INC

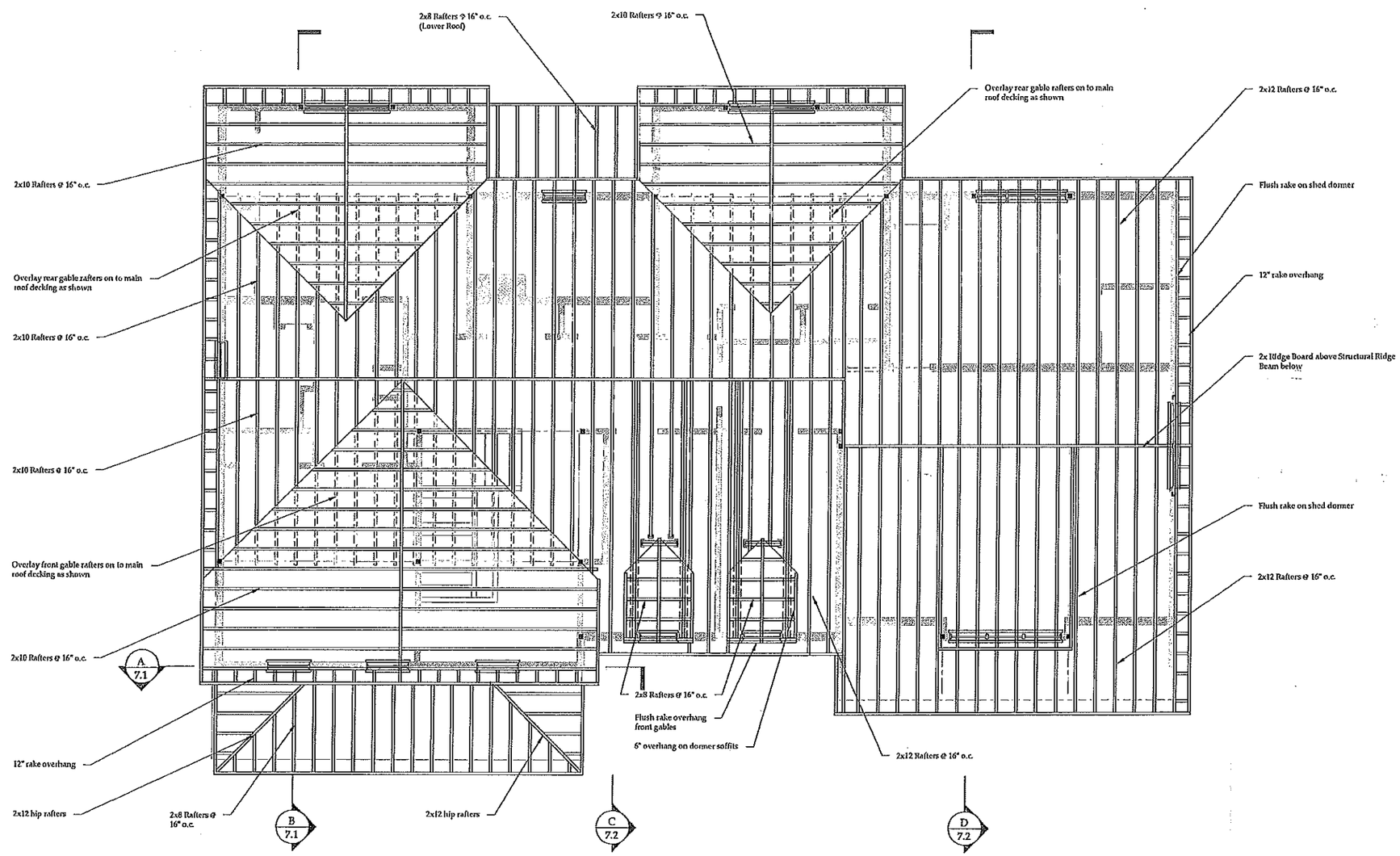

Roof Framing Plan

1. All framing lumber to be SPF#2 or better unless otherwise noted.
2. Refer to engineering beam calcs for posting requirements fror any beams.

DESIGN LOADS

	LIVE	DEAD	TOTAL
MAIN FLOOR	40	10	50
UPPER FLOORS	40	10	50
CEILING	20	10	30
ROOF	55	15	70

CONTRACTOR TO VERIFY ALL DIMENSIONS AND STRUCTURAL MEMBERS PRIOR TO STARTING CONSTRUCTION. BUILDING IS TO MEET OR EXCEED ALL STATE AND LOCAL BUILDING CODES.

JAD DESIGN GROUP INC.
P.O. BOX 728 AMHERST, NH 03031
PHONE: (603) 554-1199
www.jadhomes.com

Job : 2651
Ref :
Date: 4/26/17
Rev :

Hills Brothers Builders
Concord, MA

99 Nimrod
Concord, MA

Roof Framing Plan
Scale : 1/8" = 1'-0"

SHEET
A-6.3

© COPYRIGHT 2013
JAD DESIGN GROUP INC.

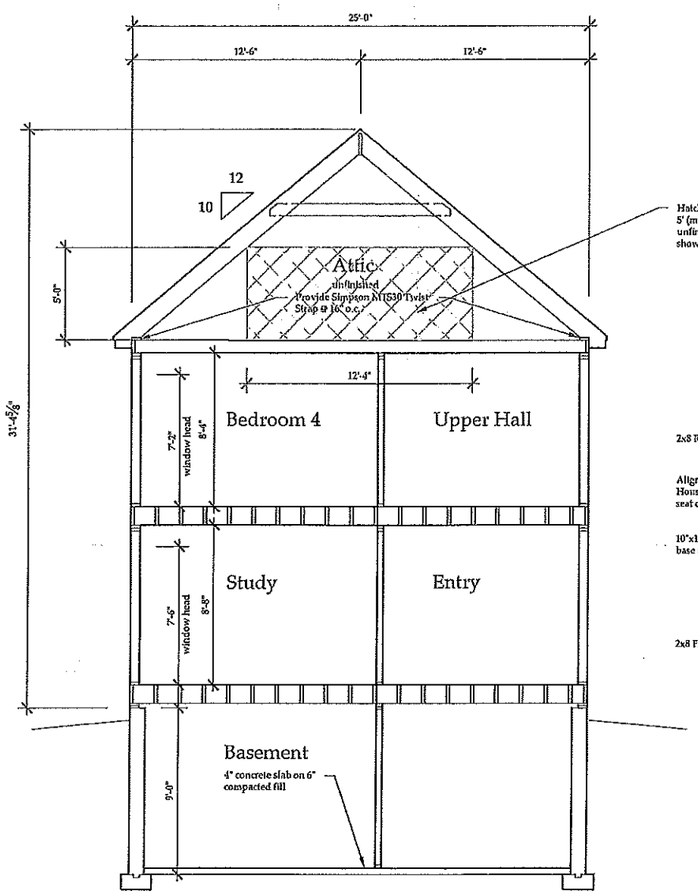

Hatched area represents 5' (min.) ceiling height in unfinished attics where shown

Section - A

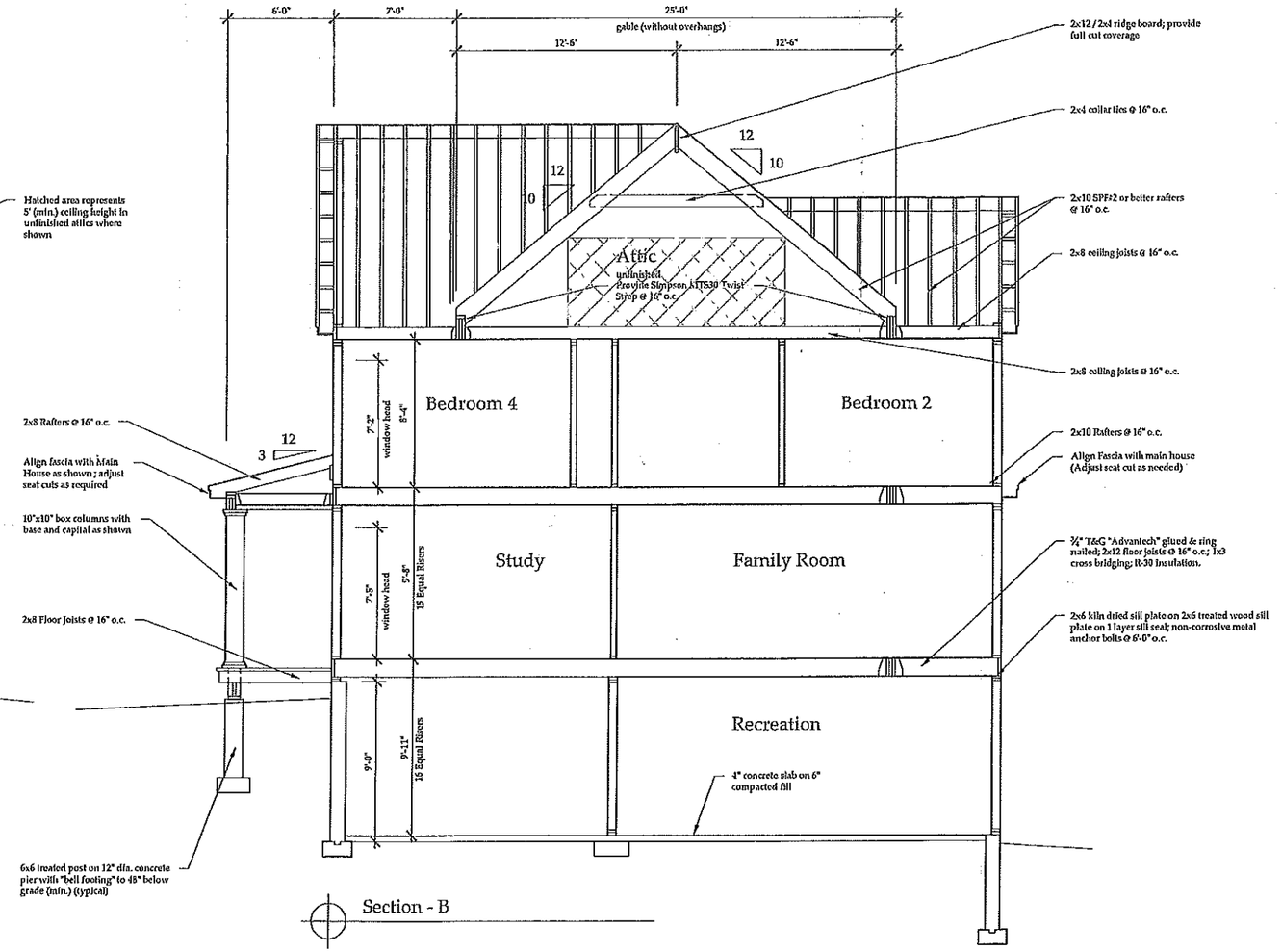

Section - B

Door Schedule

Mark	Qty.	Number	Rough Opening	Type / Notes
1		3'0"x6'8"		Front entry w/ 2-1'0" sidelights & 1'4" transom
2		2'8"x6'8"		2 panel
3		2'6"x6'8"		2 panel
4		2'0"x6'8"		2 panel
5		3'0"x6'8"		Fire Rated Interior / garage
6		3'0"x6'8"		Exterior Garage Glass View
7		6'0"x6'8"		Sliding Glass Exterior Door
8		1'6"x6'8"		2 Panel
9		9'0"x8'0"		Overhead garage door
10		2'6"x6'8"		2 panel pocket door
11		9'0"x6'8"		Triple French Sliding Glass Exterior
12		2-2'0"x6'8"		Double 2 panel
13		2-1'6"x6'8"		Double 2 panel
14				

Window Schedule — Anderson 400 Series Tilt-Wash spec. (Black clad sash with 2/2 SDL light as shown on elevations)

Mark	Qty.	Number	Rough opening	Lites (SDL)	Notes
A		TW2852	2'10 1/8"x5'4 7/8"	2/2	Double hung (egress)
B		TW28410	2'10 1/8"x5'0 7/8"	2/2	Double hung (egress* TBV meets code req.)
C		TW2852-3	8'8 3/8"x5'4 7/8"	2/2	Triple Mullion (egress)
D		AX251	2'4 7/8"x2'8"	4	Awning
E		TW20310-3	6'4 5/8"x4'0 7/8"	2/2	Triple Mullion (kitchen)
F		TW2452	2'6 1/8"x5'4 7/8"	2/2	Double hung
G		TW2042	2'2 1/8"x4'4 7/8"	2/2	Double Hung
H		AX3251	7'1 1/8"x2'8"	4	triple awning
J		TW28410-2	5'7 3/4"x5'0 7/8"	2/2	Double hung (egress* TBV meets code req.)
K		TW20310-3	6'4 5/8"x4'0 7/8"	2/2	Triple Mullion (tempered) (master tub window)
L		custom	1'6"x2'0"	4	Fixed attic gable 4 light

All rough openings to be verified by Window Manufacturer rep.
Some windows require tempered glass; see plans for details.

CONTRACTOR TO VERIFY ALL DIMENSIONS AND STRUCTURAL MEMBERS PRIOR TO STARTING CONSTRUCTION. BUILDING IS TO MEET OR EXCEED ALL STATE AND LOCAL BUILDING CODES.

JAD DESIGN GROUP INC.
P.O. BOX 728 AMHERST, NH 03031
PHONE: (603) 554-1199
www.jadhomes.com

Job : 2551
Ref :
Date: 4/26/17
Rev :

Hills Brothers Builders
Concord, MA

99 Nimrod
Concord, MA

Cross Sections
Scale : 1/8" = 1'-0"

SHEET
A-7.1

© COPYRIGHT
JAD DESIGN GROUP INC.

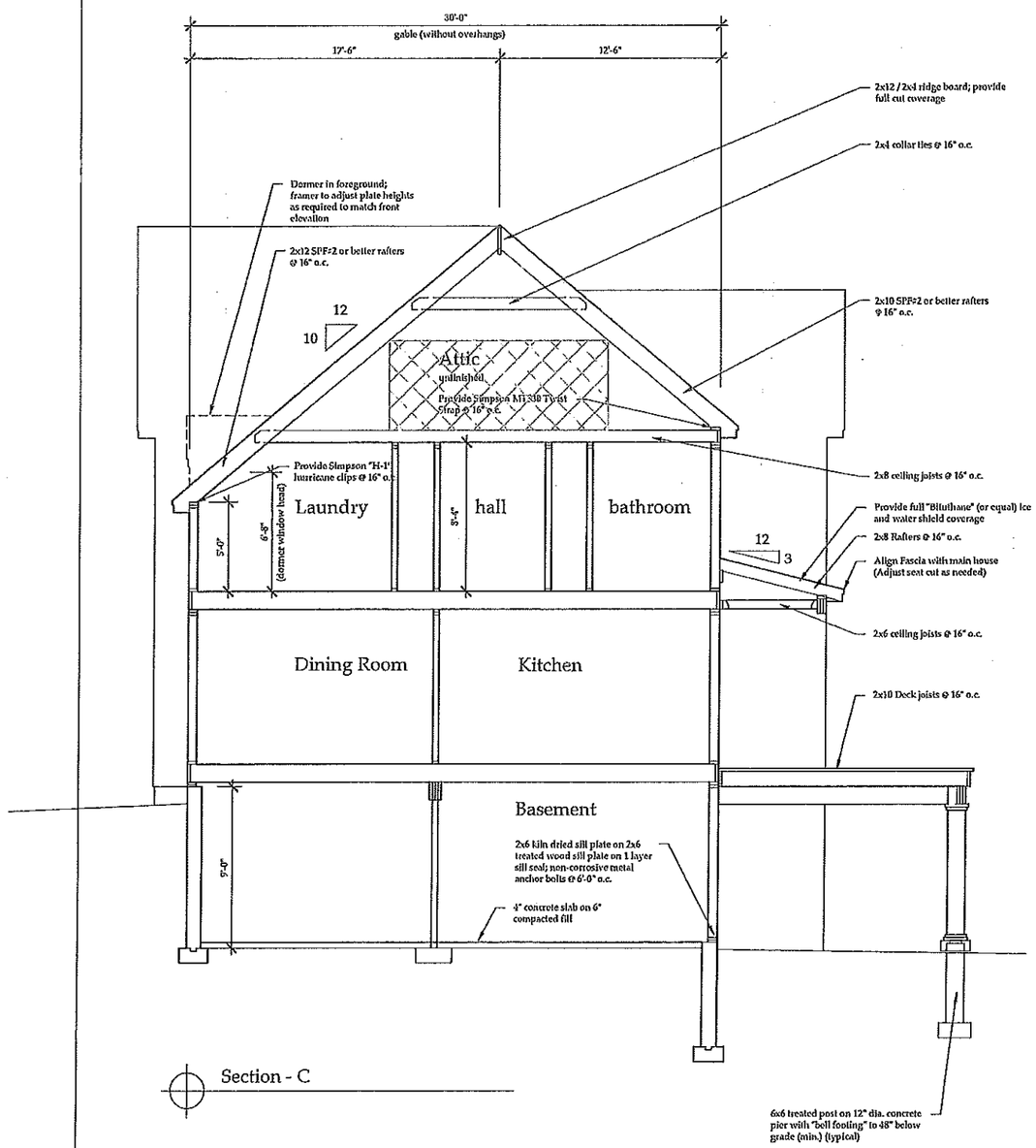

Section - C

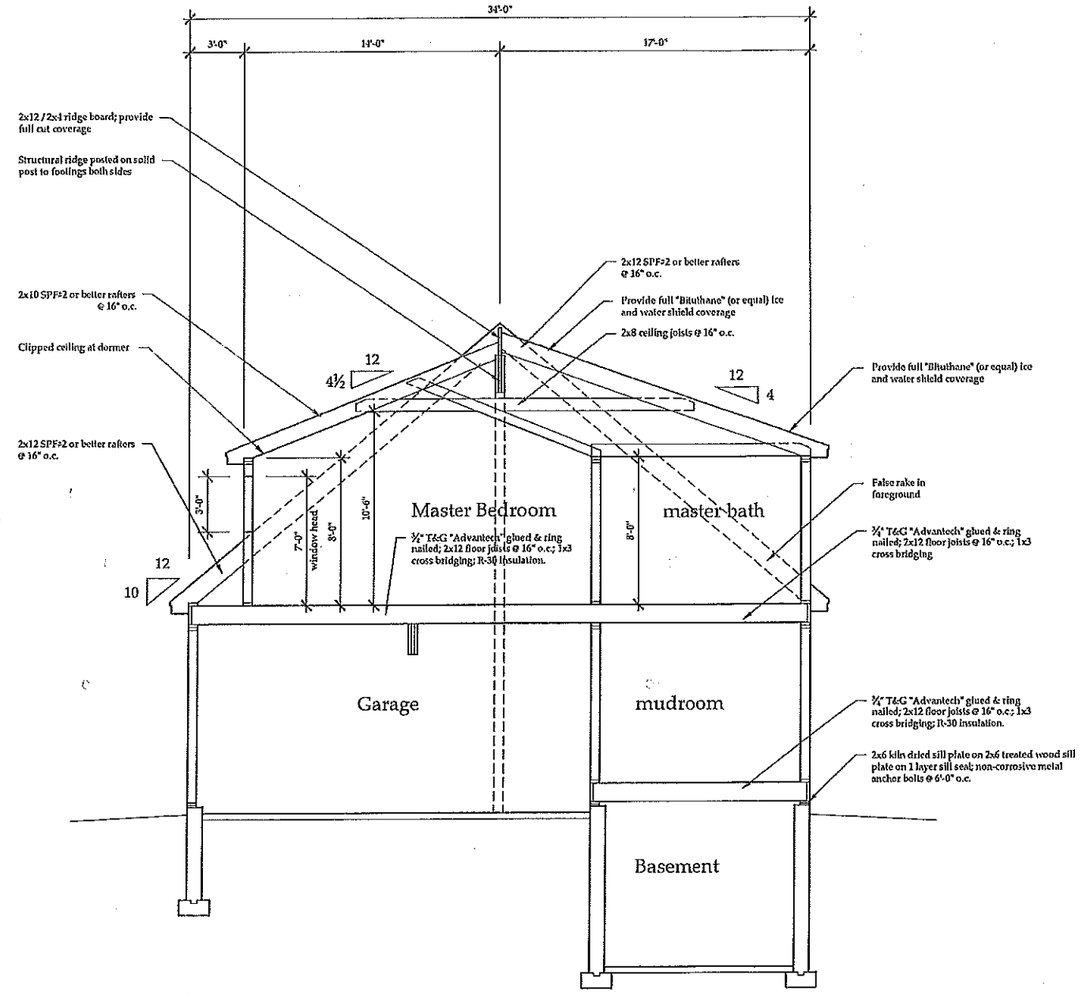

Section - D

Roof Construction
215# composition shingles on 15# building felt over ½" plywood sheathing on rafters as noted on floor plans.

Typical Soffit
1x8 sub-fascia w/ 1x3 fascia trim board w/ continuous metal drip edge. Provide continuous ventilation strip.

Wall Construction
6"(+/-) T.W. cedar shingle siding on 7/16" OSB "Zip Wall" plywood sheathing on 2x6 SPF#2 studs @ 16" o.c.; R-21 insulation. Provide 4 mil poly vapor barrier on interior w/ ½" gypsum wall board.

Typical Floor
¾" T&G Advantech sub-floor glued and ring nailed to floor joists as noted on floor plans.

Typical Sill
2x6 KD on 2x6 treated sill plate on 1 layer sill seal w/ non-corrosive metal anchor bolts @ 6'-0" o.c. (maximum). Sill to be 8" above finish grade (minimum).

Typical Stair
4-2x12 stringers w/ 10" rough treads & 1" nosing at finish (hardwood or ¾" Advantech).¾" risers equally spaced & not to exceed 7 ¾" in rise.

CONTRACTOR TO VERIFY ALL DIMENSIONS AND STRUCTURAL MEMBERS PRIOR TO STARTING CONSTRUCTION. BUILDING IS TO MEET OR EXCEED ALL STATE AND LOCAL BUILDING CODES.

JAD DESIGN GROUP INC.
P.O. BOX 728 AMHERST, NH 03031
PHONE: (603) 554-1139
www.jadhomes.com

Job : 2651
Ref :
Date: 4/26/17
Rev :

Hills Brothers Builders
Concord, MA

99 Nimrod
Concord, MA

Cross Sections
Scale : 1/8" = 1'-0"

SHEET
A-7.2

© COPYRIGHT 2017
JAD DESIGN GROUP INC.

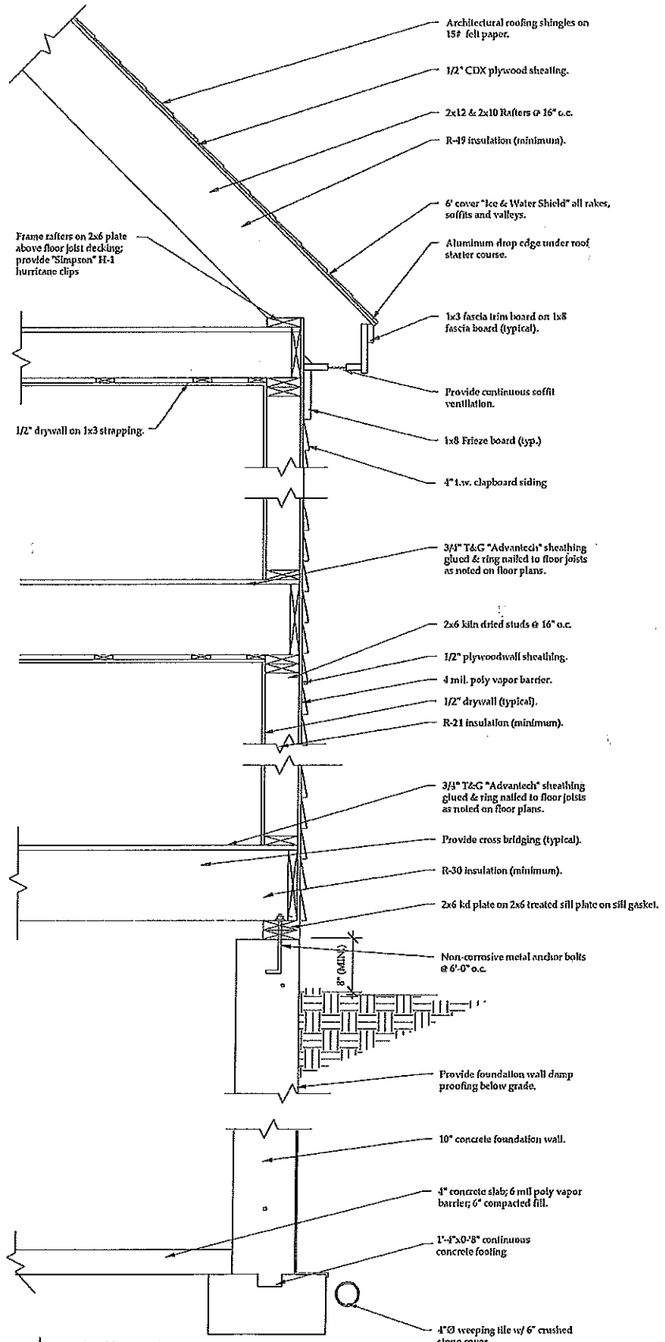

Wall Section

Scale: 1/2" = 1'-0"

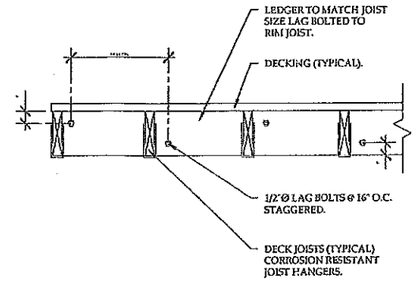

Deck Connection - Detail - A

Scale : 1" = 1'-0"

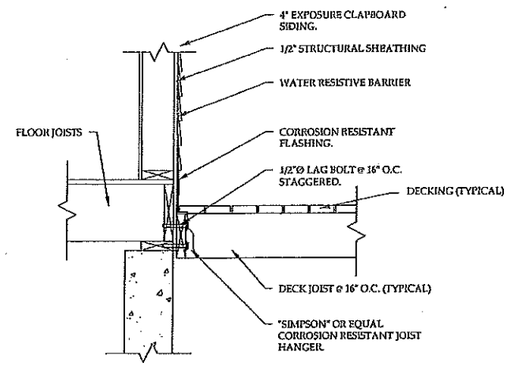

Deck Connection - Detail - B

Scale : 1" = 1'-0"

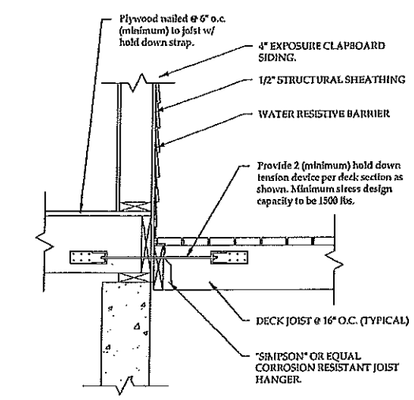

Deck Connection - Detail - C

Scale : 1" = 1'-0"

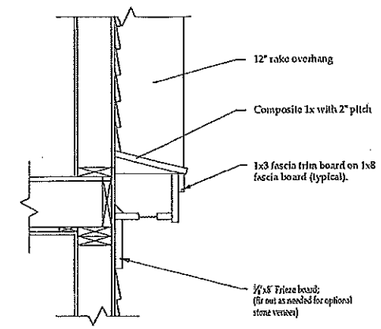

Rake Detail

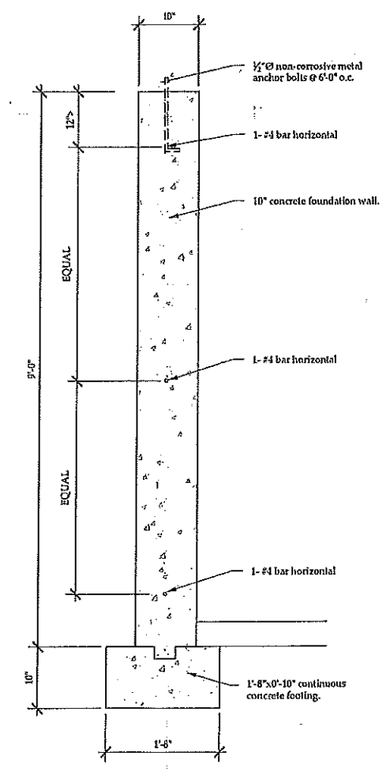

Foundation Wall Section

CONTRACTOR TO VERIFY ALL DIMENSIONS AND STRUCTURAL MEMBERS PRIOR TO STARTING CONSTRUCTION. BUILDING IS TO MEET OR EXCEED ALL STATE AND LOCAL BUILDING CODES.

JAD DESIGN GROUP INC.
P.O. BOX 728 AMHERST, NH 03031
PHONE: (603) 554-1199
www.jadhomes.com

Job : 2651
Ref :
Date: 4/26/17
Rev :

Hills Brothers Builders
Concord, MA

99 Nimrod
Concord, MA

Cross Sections
Scale : 1/8" = 1'-0"

SHEET
A-7.3

© COPYRIGHT BY JAD DESIGN GROUP INC.

NARROW WALL PORTAL FRAMING (AT GARAGES)

Each panel shall be fabricated in accordance with Figure R602.10.3.3. The wood structural panel sheathing shall extend up over the solid sawn or glued-laminated header and shall be nailed in accordance with Figure R602.10.3.3. A spacer, if used with a built up header, shall be placed on the side of the built-up beam opposite the wood structural panel sheathing. The header shall extend between the inside faces of the first full-length outer studs of each panel. One anchor bolt not less than ⅝ inch diameter (16mm) and installed in accordance with Section R403.1.6 shall be provided in the center of each sill plate. The hold-down devices shall be an embedded-strap type, installed in accordance with the manufacturer's recommendations. The panels shall be supported directly on a foundation which is continuous across the entire length of the braced wall line. The foundation shall be reinforced as shown on Figure R602.10.3.2. This reinforcement shall be lapped not less than 15 inches (381 mm) with the reinforcement required in the continuous foundation located directly under the braced wall line.

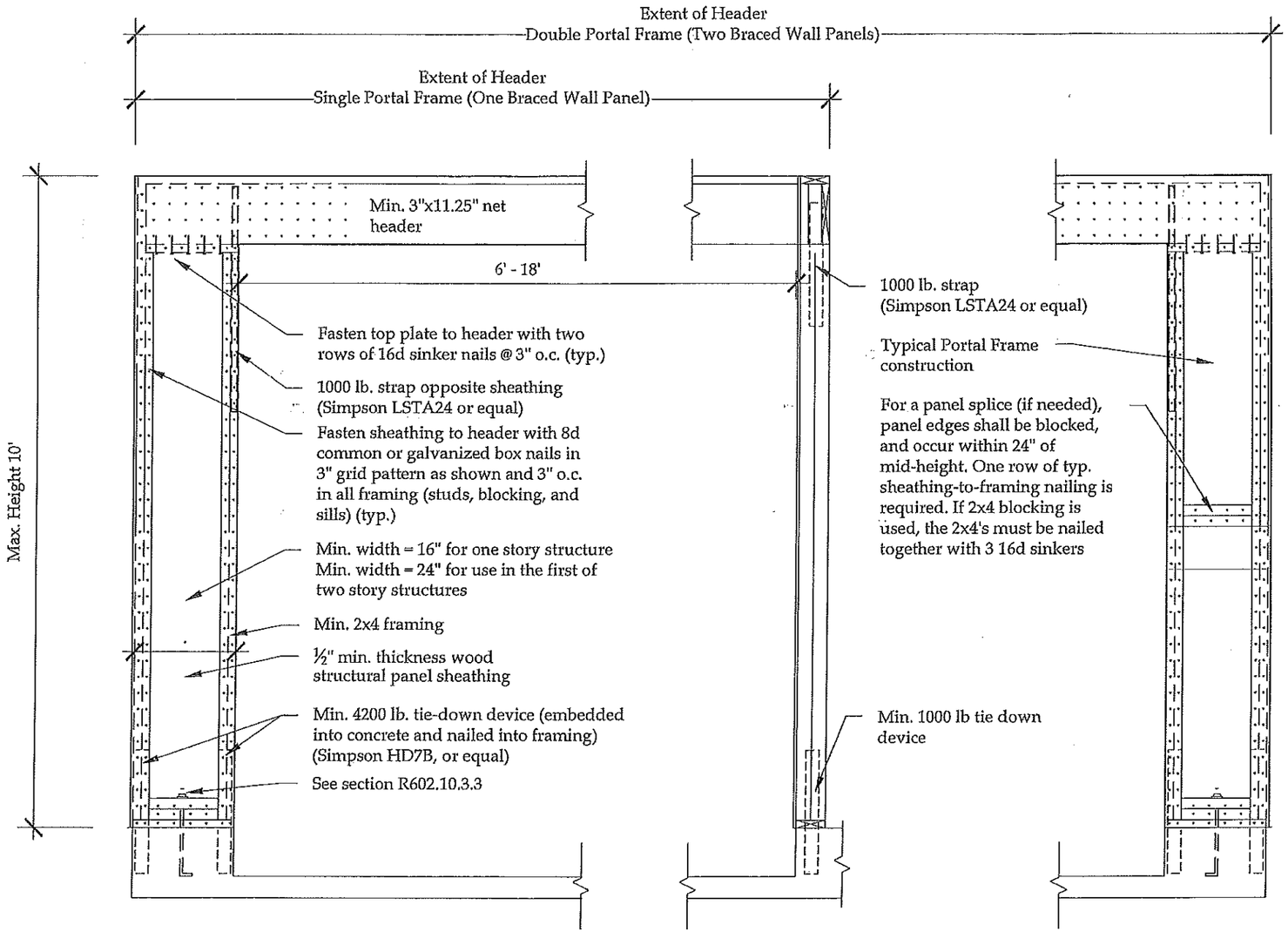

Figure R602.10.3.3

CONTRACTOR TO VERIFY ALL DIMENSIONS AND STRUCTURAL MEMBERS PRIOR TO STARTING CONSTRUCTION. BUILDING SHALL MEET OR EXCEED ALL STATE AND LOCAL BUILDING CODES.

JAD DESIGN GROUP INC.
P.O. BOX 728 AMHERST, NH 03031
PHONE: (603) 554-1199
www.jadhomes.com

Job : 2651
Ref:
Date: 4/26/17
Rev:

Hills Brothers Builders
Concord, MA

99 Nimrod
Concord, MA

Portal Framing
Scale : 1/8" = 1'-0"

SHEET
A-7.4

© COPYRIGHT 2017 JAD DESIGN GROUP INC.